SIL2 eiCAB

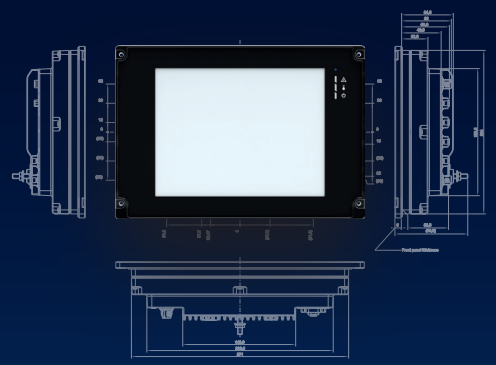

SIL2 Redundant zweiCAB

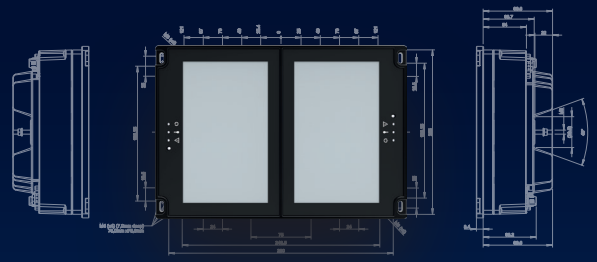

SIL0 Android eiCAB

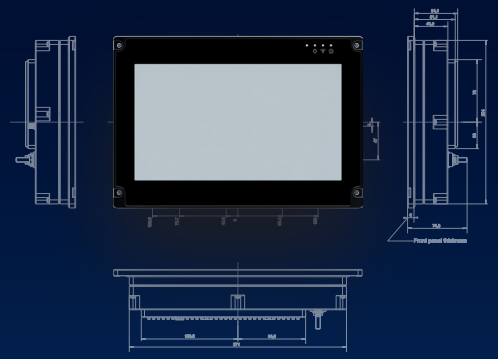

eiCAB. This. Changed. Everything.

Learn more about SIL0 and SIL2 HMIs – now also with Android

A&R TECH

	SIL2 eiCAB	SIL2 Redundant eiCAB	SIL0 Android HMI
Display	10.4” IPS	8” IPS	11.6” IPS
Brightness	1000 / 1300 cd/m²	1000 cd/m²	1200 cd/m²
MTTH	100,000 h	100,000 h	70,000 h
Weight	3.5 kg	2.8 kg each	3 kg
Resolution	1024x768	Unit: 480x800, Assembly: 960x800	1920x1080
DRAM	2 GB DDR3 @ 1600 MBit/s with ECC	4 GB DDR3 @ 1600 MBit/s with ECC	4GB DDR4
Non-volatile Memory	NAND: 4GB SLC, eMMC 16GB MLC, FRAM: 1 Mbit		eMMC: 64GB MLC (-20GB pSLC)
OS	Linux		Android
User Interface/Touch	None/Resistive/PCAP/UIC612		PCAP
Power Supply	24 – 110 VDC according to EN 50155 class S2 and C1.		
Standards	EN50155, EN50121, EN60068, EN61373, EN60529, EN50128, EN50129, EN50657		
Safety Integrity Level	BI/SIL2	SIL2	BI
Operating Temperature Range	-40°C – +70°C acc. to EN 50155 class TX/OT4		
Protection Front/Back panel	IP65/IP40		
	Interfaces		
USB	2x USB 2.0 Host interfaces	USB 2.0 Host interfaces	1 USB 2.0 OTG
Audio	1x Audio input 1x Audio output (4 WRMS @ 8 Ohm)	1x Audio output (4 WRMS @ 8 Ohm)	-
Analog Video (CCTV)	Input: 2 input channels PAL formats: B, G, H, I, D NTSC formats: M	-	-
Digital Video (Streaming)	H.264, H.265, MJPEG, Up to 8 streams in parallel, Up to 1920x1080 resolution @ 30 FPS, Dynamic Video Cropping, Scaling and Rotation		
Ethernet Interface	2 interfaces supporting 10/100MBit/s, Half- or Full duplex, Auto-Crossing, Auto-Negotiation		1 interface supporting 10/100/1000MBit
MVB	MVB ESD+/MVB EMD		-
Other Serial	-	RS232, RS422, RS485, CAN	-
Digital IO	1x SIL2/2x BI (eg, Acknowledge Button)		-
Specials	-	Up to 40Gbit/s for Leader-Follower synchronization	802.11 b/g/n – 2.4 GHz WiFi